Sun Ray™ Interoperability Brief

White Paper
August 2003

Table of Contents

Sun Ray™ Interoperability **1**
Sun Ray Thin Clients and Open Source Applications **2**
Microsoft Windows Application Access **3**
Microsoft Windows Access Via Remote Display 3
Tarantella Enterprise Server (RDP) 4
GraphOn GO-Global for Windows 4
ThinSoft WinConnect S 4
rdesktop (RDP) 5
HOBLink JWT (RDP) Citrix MetaFrame XP (ICA) 5
Microsoft Windows Access Via Libraries/APIs and Virtual Machines 5
Wine 6
CodeWeavers CrossOver Office Server Edition 6
Emulators/Virtual Machines 6
NeTraverse Win4Lin Terminal Server 6
Sun Ray Thin Clients and Midrange Solutions **7**
Tarantella Enterprise 3 8
HOBLink Terminal Edition 8
Pericom teemX 8
The Latest Interoperability Solutions **9**
Reduce TCO, Protect Your Investment **10**

Chapter 1

Sun Ray™ Interoperability

Sun Ray™ thin clients enable users to access all their mission-critical or productivity applications, regardless of what hardware or operating system (OS) the applications run on. There are solutions available for access to virtually everything, from AS400s to Microsoft Windows Terminal Servers, from the Linux OS to midrange applications. Applications can be accessed as part of a Sun™ software-supported desktop, such as the Common Desktop Environment (CDE) or GNOME 2.0.

The Sun Ray architecture's unique Controlled Access Mode also makes it possible to run these applications while bypassing any interaction with the underlying UNIX® operating system. Designed to deliver high performance, user convenience, value, and security while reducing cost and risk of data loss, Sun Ray thin clients can replace virtually everything on your network — from fat PCs to aging green-screen terminals.

Chapter 2

Sun Ray Thin Clients and Open Source Applications

Sun Ray systems represent the only thin client solution available today that offers a viable alternative to a Microsoft Environment.[1] This fact in itself suggests many advantages: not only the convenience of the Sun Ray architecture's hot-desking mobility and the ability to run in a hardened Trusted Solaris™ environment, but also a wider choice of applications, an extremely stable operating system, and considerably lower cost of ownership.

To cite just one example, reducing software licensing fees is one of the fastest ways to save money in an enterprise computing architecture. The Sun Ray system offers the following software to help reduce costs and complexity:

Sun Ray Systems Software	Comments
GNOME Desktop	Replaces Microsoft Windows
StarOffice™ Office Suite	Replaces Microsoft Office
Evolution	Replaces Microsoft Outlook
Mozilla™ Web Browser	Replaces Microsoft Internet Explorer
Server-side Software	For authentication, messaging, calendaring, and interoperability

1. While Linux-based client solutions are beginning to appear, their main feature seems to be their ability to run Microsoft applications, complete with licensing fees; they fall short of the usual Linux open source vision.

Chapter 3

Microsoft Windows Application Access

If Microsoft Windows legacy applications are still required, they are easily integrated with remote display software and terminal services or with non-Microsoft Windows solutions. For instance, CrossOver Office from CodeWeavers enables users to run Lotus Notes or Internet Explorer, among other applications, from a Linux server — without having to pay Microsoft OS licensing fees.

Microsoft Windows Access Via Remote Display

The Remote Desktop Protocol (RDP) is the native connection method to a Windows Terminal Server. Like such products as SunForum™ software and NetMeeting, it is based on the ITU-T T.128. RDP operates solely on the TCP/IP protocol. For the latest features accessing Microsoft Windows via RDP, see `microsoft.com/windowsserver2003/evaluation/overview/technologies/terminalserver.mspx`.

The Independent Computing Architecture (ICA), a protocol developed by Citrix Systems, is an add-on product for Windows Terminal Servers. The ICA protocol is the key technology in the entire Citrix product line. Unlike RDP, ICA can operate on other protocols, such as NetBEUI and IPX/SPC. With the user experience line somewhat blurred with the release of RDP 5.1, the ICA protocol and MetaFrame XP server still lead the remote display technologies with value added in the server management space. For information on full ICA/MetaFrame features, see `citrix.com/site/PS/products/QA.asp?familyID=19&productID=186&faqID=5638&featureID=QAP`.

© 2003 Sun Microsystems, Inc.

Tarantella Enterprise Server (RDP)

Tarantella Enterprise 3 offers secure Web access to any business application. Existing applications are delivered over the Internet, extranet, or intranet without changes to the host systems, architecture, or code. For details, see `tarantella.com`.

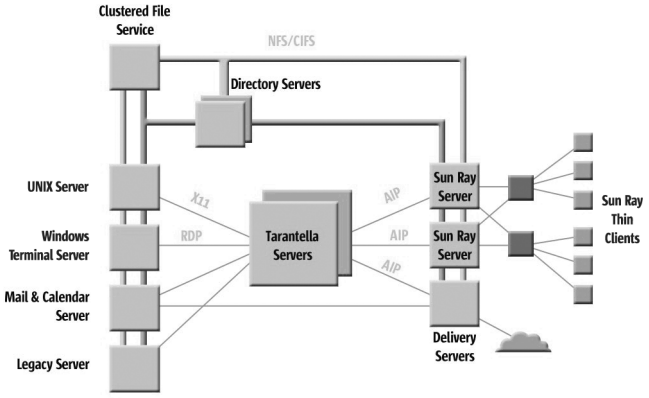

GraphOn GO-Global for Windows

GO-Global for Windows enables customers access to Microsoft Windows applications from any location, over any connection, including the Internet and dialup connections. It works with Windows 2000 Server and Windows 2000 Professional. For details, see `graphon.com/products/goglobal/xp/index.html`.

ThinSoft WinConnect S

WinConnect S is a software solution that connects Solaris™ Software users to a Microsoft Windows server to run Microsoft Windows applications over a network or the Internet. WinConnect's low data transmission bandwidth even allows a remote connection over a dialup or wireless connection to access data and run Microsoft Windows applications wherever the user may need them. For details, see `thinsoftinc.com/products_winconnects_info.html`.

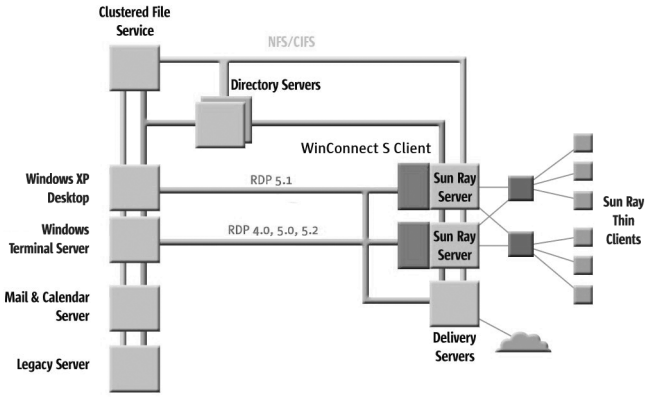

© 2003 Sun Microsystems, Inc.

rdesktop (RDP)

rdesktop is an open source client for Windows NT Terminal Servers and Windows 2000 Terminal Services that can natively speak Remote Desktop Protocol (RDP) in order to present a user's Window NT desktop. It currently runs on most UNIX-based platforms with the X Window System; other ports should be fairly straightforward. Unlike Citrix ICA, rdesktop does not require any server extensions. For details, see `rdesktop.org`.

HOBLink JWT (RDP)

HOBLink JWT is a Java™ technology-based solution for accessing Windows Terminal Servers. It makes business-critical data in Microsoft Windows-based applications available to all users, regardless of the type of hardware or operating system. For details, see `hobsoft.com/www_us/produkte/connect/jwt.htm`.

Citrix MetaFrame XP (ICA)

Citrix MetaFrame XP is the world's most widely deployed presentation server for central management of Microsoft Windows, Web, and legacy applications and delivery of their functionality. For details, see `citrix.com`.

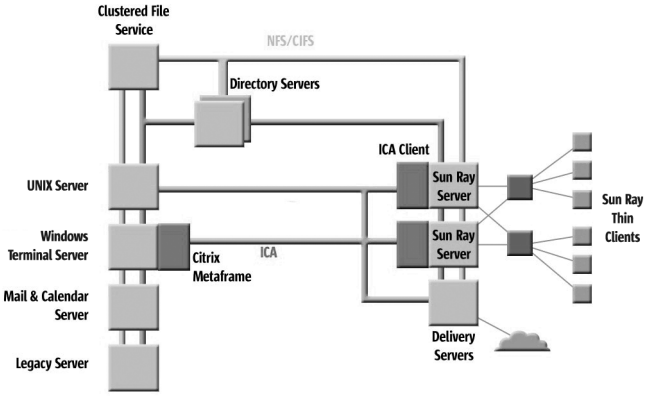

Microsoft Windows Access Via Libraries/APIs and Virtual Machines

Library/API and virtual machine access methods for Microsoft Windows applications differ from remote display technologies as much they do from one another. The common traits are:

- They require x86-based hardware and UNIX or Linux software to run.
- They enable users to display Microsoft Windows applications on their Sun Ray thin client.

These technologies do not currently run on the server, and therefore require an X server in order to display.

© 2003 Sun Microsystems, Inc.

Wine

Wine is an open source implementation of the Microsoft Windows API on top of UNIX software and the X Window System.

Wine does not require Microsoft Windows because it is a completely alternative implementation consisting of 100% Microsoft-free code; however, it can optionally use native system DLLs if they are available. Wine provides both a development toolkit (Winelib) for porting Microsoft Windows sources to the UNIX OS and a program loader, which allows many unmodified Microsoft Windows binaries to run on x86-based UNIX operating systems.

Note – Wine is not an emulator (which is what Wine stands for), meaning that it does not emulate the x86 processor. Theoretically, applications that do not make system calls should run just as fast with Wine as they do under Microsoft Windows.

Application support for Wine is fairly limited, but some applications do run well and have commercial support.

CodeWeavers CrossOver Office Server Edition

CodeWeavers CrossOver Office is a commercial implementation of the Wine project. CrossOver Office Server Edition enables users to run Microsoft Windows productivity applications in a distributed, thin-client environment under Linux, without requiring Microsoft operating system licenses for each client machine. Server Edition is also a great addition to Solaris environments. With built-in support for Solaris desktops, it makes running Microsoft Windows applications a possibility on Sun Ray thin clients without any Microsoft operating systems fees. For details, see `codeweavers.com/products/cxofficeserver/`.

Emulators/Virtual Machines

To run Microsoft Windows under a virtual machine, an emulator requires a full copy of a Microsoft Windows operating system, plus a license for each user in addition to a license for the emulator and the Linux operating system that it is running under. The trade-offs, however, are:

- Most applications work (since they are running under a native Microsoft Windows OS).
- It is a great environment for software developers to run applications in and test other operating systems without rebooting.

NeTraverse Win4Lin Terminal Server

The Win4Lin Terminal Server delivers the benefits of a Linux computing platform model to users in a networked environment. Leveraging stable Linux platforms to deliver Microsoft Windows application services over a network, Win4Lin Terminal Server provides centralized management, optimized resource deployment, and network integration. Win4Lin supports Windows 95, 98 and ME. For details, see `netraverse.com/products/wts`.

Chapter 4

Sun Ray Thin Clients and Midrange Solutions

Sun Ray thin clients provide support, with the aid of third-party software, for virtually all popular character-based host systems, including those from IBM, HP (including Tandem and Digital), SCO, and other UNIX platforms. Along with character-based hosts, solutions are available for the Digital VT340 (ReGIS) graphics emulation and for the Tektronix 4207 and 4111 high-end graphics terminals.

The following emulations/host protocols can be delivered to the desktop using a Sun Ray thin client:

Digital VT52, 100, 220, 320, 420, 510, 520	SCO Console. ANSI 386
IBM TN3270E, TN3287 (LU Printing)	IBM TN5250E, TN3812-1 (Printing)
IBM 3151 Model 11 and 31	Wyse 50, 50+, 60
Hazeltine 1500, ADDS A2	Televideo 910, 925
Hewlett-Packard 2392A, 2622A, 700/92	Tandem 6526, 6530
Data General D410	Stratus V102
Siemens 97801	Bull BQ 7107
ICL Doc 18	MDIS P8, P9, P12
Viewdata	Digital VT340 (ReGIS)
Tektronix 4010/4014	Westward 2119
Tektronix 4207	Tektronix 4111

© 2003 Sun Microsystems, Inc.

Tarantella Enterprise 3

Not only does Tarantella Enterprise 3 support Microsoft Windows, it also it offers a suite of emulators to access midrange infrastructure. X11, VT, 3270, and 5250 emulations are all covered by the Tarantella Enterprise Server product. For details, see `tarantella.com`.

HOBLink Terminal Edition

HOBLink Terminal Edition offers Java technology-based 3270, 5250, and a full range of VT emulators, which can be centrally administered and configured. HOBLink Secure allows for encryption of communication data. For details, see `hobsoft.com/www_us/produkte/connect/term-ed.htm`.

Pericom teemX

Pericom teemX offers a complete solution to legacy access for Linux and UNIX workstations or X terminals with the X11 protocol using Motif, OpenWindows™, VUE, or CDE graphical user interfaces. For details, see `pericom-software.com/teemx.asp`.

Chapter 5

The Latest Interoperability Solutions

Since the Sun Ray desktop unit (DTU) is a stateless device that stores no local programs or configuration information, it is possible to run the latest interoperability solutions always, without waiting. Updating the Sun Ray server with a new solution takes no more than a few minutes, with immediate benefits to all users. That means no waiting for a nightly push of a software packages or firmware to update all the client machines; and administrators do not need to visit each desktop to install software. Simply put, the Sun Ray thin client eliminates desktop administration, freeing users from the individual desktop and freeing administrators to concentrate on other important functions.

Chapter 6

Reduce TCO, Protect Your Investment

The Sun Ray architecture holds many advantages over other thin clients as well as fat client models. These advantages when coupled with the plethora of interoperability solutions, make the Sun Ray thin client the ultimate client, regardless of needs.

- One administrator can manage over 1,000 clients
- No administration is required to add, move, or exchange Sun Ray DTUs
- Very secure: token authentication, no viruses, no data loss
- Less than 30-second boot up
- Zero annual desktop refresh costs
- Significant software license savings
- Silent operation: no fans or moving parts
- Very low power consumption

SUN™ Copyright 2003 Sun Microsystems, Inc., 4150 Network Circle, Santa Clara, California 95054 U.S.A. All rights reserved.

This product or document is protected by copyright and distributed under licenses restricting its use, copying, distribution, and decompilation. No part of this product or document may be reproduced in any form by any means without prior written authorization of Sun and its licensors, if any. Third-party software, including font technology, is copyrighted and licensed from Sun suppliers.

Parts of the product may be derived from Berkeley BSD systems, licensed from the University of California. UNIX is a registered trademark in the U.S. and other countries, exclusively licensed through X/Open Company, Ltd.

Sun, Sun Microsystems, the Sun logo, Java, OpenWindows, Solaris, StarOffice, Sun Ray, and Trusted Solaris are trademarks, registered trademarks, or service marks of Sun Microsystems, Inc. in the U.S. and other countries. All SPARC trademarks are used under license and are trademarks or registered trademarks of SPARC International, Inc. in the U.S. and other countries. Products bearing SPARC trademarks are based upon an architecture developed by Sun Microsystems, Inc. Mozilla is a trademark or registered trademark of Netscape Communications Corporation in the United States and other countries.

The OPEN LOOK and Sun™ Graphical User Interface was developed by Sun Microsystems, Inc. for its users and licensees. Sun acknowledges the pioneering efforts of Xerox in researching and developing the concept of visual or graphical user interfaces for the computer industry. Sun holds a non-exclusive license from Xerox to the Xerox Graphical User Interface, which license also covers Sun's licensees who implement OPEN LOOK GUIs and otherwise comply with Sun's written license agreements.

RESTRICTED RIGHTS: Use, duplication, or disclosure by the U.S. Government is subject to restrictions of FAR 52.227-14(g)(2)(6/87) and FAR 52.227-19(6/87), or DFAR 252.227-7015(b)(6/95) and DFAR 227.7202-3(a).

DOCUMENTATION IS PROVIDED "AS IS" AND ALL EXPRESS OR IMPLIED CONDITIONS, REPRESENTATIONS AND WARRANTIES, INCLUDING ANY IMPLIED WARRANTY OF MERCHANTABILITY, FITNESS FOR A PARTICULAR PURPOSE OR NON-INFRINGEMENT, ARE DISCLAIMED, EXCEPT TO THE EXTENT THAT SUCH DISCLAIMERS ARE HELD TO BE LEGALLY INVALID.

SUN™ Copyright 2003 Sun Microsystems, Inc., 4150 Network Circle, Santa Clara, Californie 95054 Etats-Unis. Tous droits réservés.

Ce produit ou document est protégé par un copyright et distribué avec des licences qui en restreignent l'utilisation, la copie, la distribution, et la décompilation. Aucune partie de ce produit ou document ne peut être reproduite sous aucune forme, par quelque moyen que ce soit, sans l'autorisation préalable et écrite de Sun et de ses bailleurs de licence, s'il y en a. Le logiciel détenu par des tiers, et qui comprend la technologie relative aux polices de caractères, est protégé par un copyright et licencié par des fournisseurs de Sun.

Des parties de ce produit pourront être dérivées des systèmes Berkeley BSD licenciés par l'Université de Californie. UNIX est une marque déposée aux Etats-Unis et dans d'autres pays et licenciée exclusivement par X/Open Company, Ltd.

Sun, Sun Microsystems, le logo Sun, Java, OpenWindows, Solaris, StarOffice, Sun Ray, et Trusted Solaris sont des marques de fabrique ou des marques déposées, ou marques de service, de Sun Microsystems, Inc. aux Etats-Unis et dans d'autres pays. Toutes les marques SPARC sont utilisées sous licence et sont des marques de fabrique ou des marques déposées de SPARC International, Inc. aux Etats-Unis et dans d'autres pays. Les produits portant les marques SPARC sont basés sur une architecture développée par Sun Microsystems, Inc. Mozilla est une marque de Netscape Communications Corporation aux Etats - Unis et à d'autres pays.

L'interface d'utilisation graphique OPEN LOOK et Sun™ a été développée par Sun Microsystems, Inc. pour ses utilisateurs et licenciés. Sun reconnaît les efforts de pionniers de Xerox pour la recherche et le développement du concept des interfaces d'utilisation visuelle ou graphique pour l'industrie de l'informatique. Sun détient une licence non exclusive de Xerox sur l'interface d'utilisation graphique Xerox, cette licence couvrant également les licenciés de Sun qui mettent en place l'interface d'utilisation graphique OPEN LOOK et qui en outre se conforment aux licences écrites de Sun.

CETTE PUBLICATION EST FOURNIE "EN L'ETAT" ET AUCUNE GARANTIE, EXPRESSE OU IMPLICITE, N'EST ACCORDEE, Y COMPRIS DES GARANTIES CONCERNANT LA VALEUR MARCHANDE, L'APTITUDE DE LA PUBLICATION A REPONDRE A UNE UTILISATION PARTICULIERE, OU LE FAIT QU'ELLE NE SOIT PAS CONTREFAISANTE DE PRODUIT DE TIERS. CE DENI DE GARANTIE NE S'APPLIQUERAIT PAS, DANS LA MESURE OU IL SERAIT TENU JURIDIQUEMENT NUL ET NON AVENU.

Please
Recycle

Adobe PostScript™

Learn More

Get the inside story on the trends and technologies shaping the future of computing by signing up for the Sun Inner Circle program. You'll receive a monthly newsletter packed with information on the latest innovations, plus access to a wealth of resources. Register today to join the Sun Inner Circle Program at sun.com/joinic.

To receive additional information on Sun software, products, programs, and solutions, visit sun.com/software.

Sun Microsystems, Inc. 4150 Network Circle, Santa Clara, CA 95054 USA **Phone** 800 786-7638 or +1 512 434-1577 **Web** sun.com

Sun microsystems
We make the net work.

Sun Worldwide Sales Offices: Africa (North, West and Central) +33-13-067-4680, Argentina +5411-4317-5600, Australia +61-2-9844-5000, Austria +43-1-60563-0, Belgium +32-2-704-8000, Brazil +55-11-5187-2100, Canada +905-477-6745, Chile +56-2-3724500, Colombia +571-629-2323, Commonwealth of Independent States +7-502-935-8411, Czech Republic +420-2-3300-9311, Denmark +45 4556 5000, Egypt +202-570-9442, Estonia +372-6-308-900, Finland +358-9-525-561, France +33-134-03-00-00, Germany +49-89-46008-0, Greece +30-1-618-8111, Hungary +36-1-489-8900, Iceland +354-563-3010, India–Bangalore +91-80-2298989/2295454; New Delhi +91-11-6106000; Mumbai +91-22-697-8111, Ireland +353-1-8055-666, Israel +972-9-9710500, Italy +39-02-641511, Japan +81-3-5717-5000, Kazakhstan +7-3272-466774, Korea +822-2193-5114, Latvia +371-750-3700, Lithuania +370-729-8468, Luxembourg +352-49 11 33 1, Malaysia +603-21161888, Mexico +52-5-258-6100, The Netherlands +00-31-33-45-15-000, New Zealand–Auckland +64-9-976-6800; Wellington +64-4-462-0780, Norway +47 23 36 96 00, People's Republic of China–Beijing +86-10-6803-5588; Chengdu +86-28-619-9333; Guangzhou +86-20-8755-5900; Shanghai +86-21-6466-1228; Hong Kong +852-2202-6688, Poland +48-22-8747800, Portugal +351-21-4134000, Russia +7-502-935-8411, Singapore +65-6438-1888, Slovak Republic +421-2-4342-94-85, South Africa +27 11 256-6300, Spain +34-91-596-9900, Sweden +46-8-631-10-00, Switzerland–German 41-1-908-90-00; French 41-22-999-0444, Taiwan +886-2-8732-9933, Thailand +662-344-6888, Turkey +90-212-335-22-00, United Arab Emirates +9714-3366333, United Kingdom +44-1-276-20444, United States +1-800-555-9SUN or +1-650-960-1300, Venezuela +58-2-905-3800

9/03 R1.0